NOTES:

1. COLOR DICTATED BY SALES ORDER. SEE SOP 622-200-103 FOR PART COLOR DESIGNATOR.
2. ASSEMBLE AND INSPECT PER SOP 620-7918
3. PN: 731-5979,(PALLET) NOT SHOWN IN BOM, FOR PACKAGING REF. ONLY.
4. MOUNT SECURELY TO PALLET
5. PACKAGE ITEMS IN A MANNER THAT THEY WILL NOT BE DAMAGED DURING SHIPPING/STORAGE.
6. LABEL PACKAGE TO INCLUDE
   a. PO NUMBER AND DATE
   b. ASSEMBLY NUMBER
   c. BAR CODE OF ASSEMBLY NUMBER (CODE 128)
   d. ASSEMBLY DESCRIPTION
   e. ASSEMBLY REVISION
   f. WEIGHT (LBS / KGs)

REVISION HISTORY

| REV | DATE | DESCRIPTION | ECO | BY |
|---|---|---|---|---|
| A | 9/23/16 | DOCUMENT RELEASE | 15560 | RLH |
| B | 4/13/2017 | IS 731-8027 WAS 731-7523, IS 731-8075 WAS 731-4764, ADD 731-8118 | 15640 | RLH |
| C | 5/4/2017 | IS: 731-8120 (1) WAS: 731-3159 (1), IS:731-8117 (1) WAS: 731-2445 (1) | 15666 | AW |

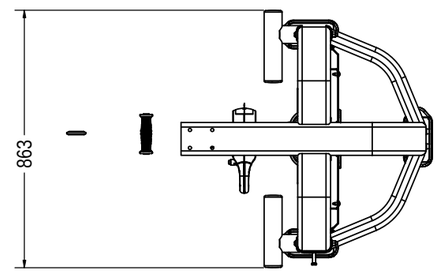


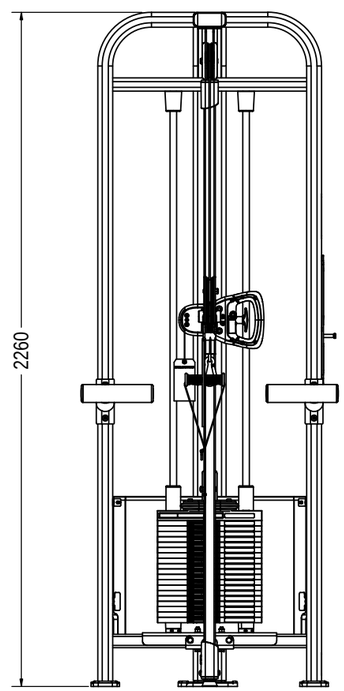


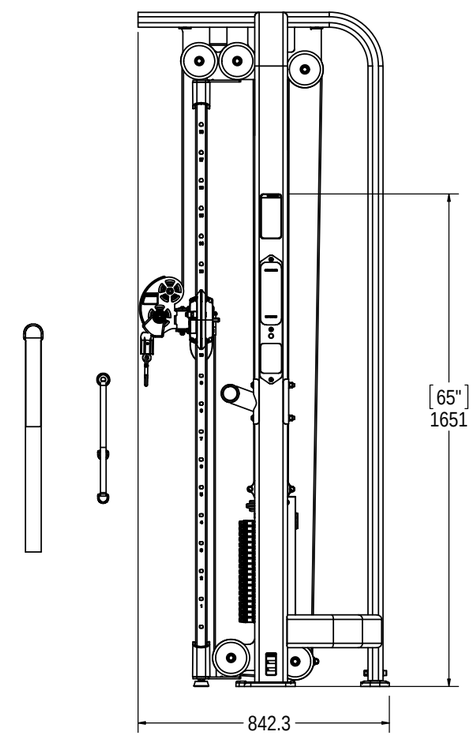


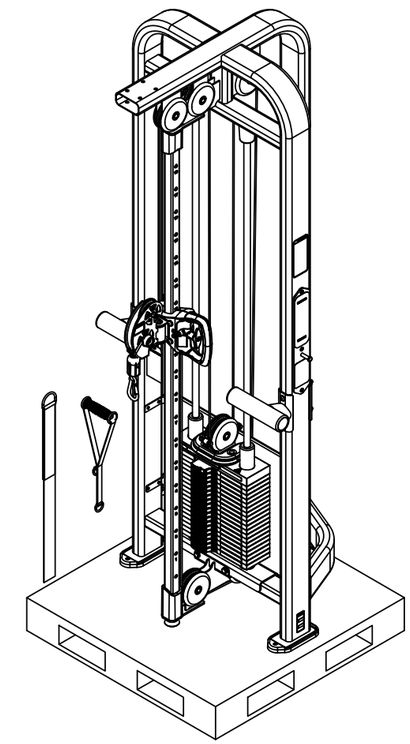

DOCUMENT STATUS:

NOTICE OF PROPRIETARY INFORMATION

THIS DOCUMENT SHALL NOT BE REPRODUCED NOR SHALL THE INFORMATION CONTAINED HEREIN BE USED BY OR DISCLOSED TO OTHER EXCEPT AS EXPRESSLY AUTHORIZED BY CORE HEALTH & FITNESS, LLC.

| CLASS OF WORK | | UNLESS OTHERWISE SPECIFIED DIMS ARE IN mm. TOLERANCES FOR MEASURE OF LENGTH ARE: 0.5 to 3 | > 3 to 6 | > 6 to 30 | > 30 to 120 | > 120 to 400 | > 400 to 1000 | > 1000 to 2000 | > 2000 | ANGLES = ±2° |
|---|---|---|---|---|---|---|---|---|---|---|
| FINE | | ±0.05 | ±0.05 | ±0.1 | ±0.15 | ±0.2 | ±0.3 | ±0.5 | ----- | |
| MEDIUM | X | ±0.1 | ±0.1 | ±0.2 | ±0.3 | ±0.5 | ±0.8 | ±1.2 | ±2 | |
| COARSE | | ±0.2 | ±0.3 | ±0.5 | ±0.8 | ±1.2 | ±2 | ±3 | ±4 | |
| VERY COARSE | | ----- | ±0.5 | ±1 | ±1.5 | ±2.5 | ±4 | ±6 | ±8 | |

MATERIAL
SEE BOM

FINISH
SEE NOTES

VENDOR: LAND AMERICA P/N:

THIRD ANGLE PROJECTION

| | INITIAL | DATE |
|---|---|---|
| DRAWN | RLH | 9/12/16 |
| CHECKED | | |
| APPROVED | | |
| | U.O.M. | MM |

CORE HEALTH & FITNESS, LLC
4400 NE 77th Ave., Suite 300
Vancouver, WA 98662

CORE PART NO: 731-7726-XX
REV: C
TITLE: NP-TOWER,CABLE CROSS
SCALE: 1:20 | SHEET 1 OF 4 | SHEET SIZE: B

| ITEM NO. | PART NUMBER | DESCRIPTION | QTY. | |
|---|---|---|---|---|
| 1 | 110-3802 | SCREW,M10x1.5,105mm,HHC,HE,AS,ZC,GR12.9 | 2 | |
| 2 | 110-3817 | SCREW,M10x1.5,50MM,HHC,HE,AS,12.9,ZC,PT | 6 | |
| 3 | 110-3880 | SCREW,M8x1.25,45mm,HHC,HE,AS,ZC,GR12.9 | 3 | |
| 4 | 731-0111 | STOP,BUMPER,WGT PLT | 2 | |
| 5 | 731-0112 | SET COLLAR,GUIDE ROD,Ø22.4mm | 2 | |
| 6 | 731-0127 | RACE,WEAR SLEEVE,CABLE | 3 | |
| 7 | 731-0165 | CAP,PLASTIC,PULLEY,Ø120mm | 10 | |
| 8 | 731-0355 | WASHER,PLAIN,M8,NARROW | 6 | |
| 9 | 731-0360 | WASHER,PLAIN,M8,LARGE,GRADE A | 2 | |
| 10 | 731-0363 | NUT,M10X1.5,NYLOC | 16 | |
| 11 | 731-0365 | NUT,M8 X 1.25,NYLOC JAM | 2 | |
| 12 | 731-0367 | WASHER,PLAIN,M10 | 32 | |
| 13 | 731-0377 | SCREW,M10 X 1.5,12mm,FPS,HK | 4 | |
| 14 | 731-0381 | HOUSING,LOGO,STARTRAC | 1 | |
| 15 | 731-0517 | STICKER, WARNING, BOLT DOWN | 1 | |
| 16 | 731-0588 | RETAINING RING,EXT.,1/4" SHAFT | 2 | |
| 17 | 731-0731 | ASSY,PULLEY,Ø120MM,CABLE | 6 | |
| 18 | 731-0801 | NUT,RIVET,M6 | 3 | |
| 19 | 731-1194 | SCREW,M6 x 1.0,16mm,FHM,HK | 3 | |
| 20 | 731-1448 | NUT,M8x1.25,ACORN | 2 | |
| 21 | 731-1878 | WELD,ADJ. GUIDE TUBE, DAP | 1 | |
| 22 | 731-1932 | RIVET,5MM | 12 | |
| 23 | 731-1933 | RIVET, PUSH TYPE | 4 | |
| 24 | 731-2016 | CLIP,CARABINEER,3/8 IN.,CLP | 1 | |
| 25 | 731-2028 | SCREW,M8 X 1.25,90mm,BHC,HK | 1 | |
| 26 | 731-2223 | VELCRO LOOP WITH ADHESIVE | 2 | |
| 27 | 731-2224 | VELCRO HOOK WITH ADHESIVE | 2 | |
| 28 | 731-8117 | ASSY,SWIVEL,HANDLE,DAP | 1 | C |
| 29 | 731-2446 | NUT,3/8 -16,JAM | 1 | |
| 30 | 731-2447 | FOOT,ADJ,3/8-16 | 1 | |
| 31 | 731-2448 | SCREW,M10x1.5,16MM,BHC,HK,AS,GR-12.9,NKL | 2 | |
| 32 | 731-2580 | M10 X 65MM HSHCS | 2 | |
| 33 | 731-2640 | WELD,FOOT,MAX RACK,RH | 1 | |
| 34 | 731-2647 | FOOT,LONG,LEVERAGE | 3 | |
| 35 | 731-2855 | CAP END 60MM TUBE | 4 | |
| 36 | 731-3129-XX | WELDMENT,SINGLE STATION TOWER | 1 | |
| 37 | 731-3142 | ASSY,WGT STK,100kG,CC | 1 | |
| 38 | 731-3157-XX | WELD,POST MOUNT,LOW | 1 | |
| 39 | 731-3158 | CAP,PULLEY,MODIFIED | 2 | |
| 40 | 731-8119 | ASSY,CABLE,CC, 1/8 IN | 1 | C |
| 41 | 731-3161 | SCREW,M12 X 1.75,25mm,FHM,HK,AS,GR-10.9,NKL | 1 | |
| 42 | 731-3163-XX | SHROUD,SINGLE TOWER | 1 | |
| 43 | 731-3164-XX | WELD,PLACARD,MS | 1 | |
| 44 | 731-3169 | PLATE,ADD ON WEIGHT | 1 | |
| 45 | 731-3170 | BRKT,SHROUD,LOW,MS | 2 | |
| 46 | 731-3171 | BRKT,MS,HOOK N LOOP | 2 | |
| 47 | 731-3174 | BRKT, BALET BAR MNT | 2 | |
| 48 | 731-3175 | WELD,BALET BAR,R,CC | 1 | |
| 49 | 731-3177 | WELD,BALET BAR,L,CC | 1 | |
| 50 | 731-3193 | GUIDE ROD,Ø22MM X 1811MM | 2 | |
| 51 | 731-3223 | SCREW,M10 X 1.5,140MM,BHC,HK, CS, NP | 4 | |
| 52 | 731-3883 | ASSY,HANDLE,STIRRUP,STARTRAC,SMALL | 1 | |
| 53 | 731-3896 | ASSY,STRAP,ANKLE | 1 | |
| 54 | 731-4189 | BRKT,SHROUD MOUNT,MS | 2 | |
| 55 | 731-4439 | STICKER,ADD ON, MULTI STATION | 1 | |
| 56 | 731-5210 | CAP,GUIDE ROD, WITH STOP | 2 | |
| 57 | 731-5516 | SCREW,M10x1.5,75mm,HHC,HE,AS,12.9,ZC | 2 | |
| 58 | 731-7311 | STICKER,NAUTILUS,DECO,45MMX191MM | 1 | |
| 59 | 731-7348 | PLACARD,CABLE CROSS, NAU | 1 | |
| 60 | 731-7520 | STOP,BUMPER,TOP,DAP/MS | 1 | |
| 61 | 731-7521 | STOP,BUMPER,BOTTOM,DAP/MS | 1 | |
| 62 | 731-8027 | ASSY,MECH,PULLEY,ADJ,MS,w/2nd PIN | 1 | |
| 63 | 731-8075 | ASSY,SWIVEL,PULLEYS, MS/DAP | 1 | |
| 64 | 731-8118 | STICKER,INSTRUCTIONS,TROLLEY | 1 | |

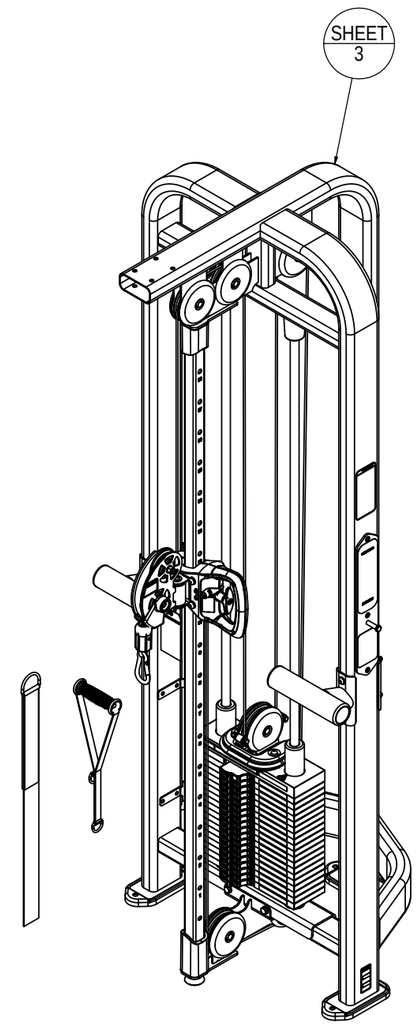


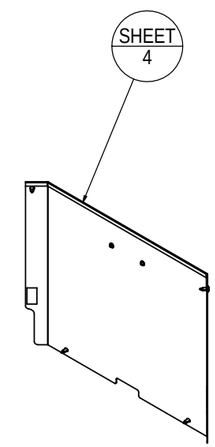


CORE HEALTH & FITNESS, LLC
4400 NE 77th Ave., Suite 300
Vancouver, WA 98662

| CORE PART NO | REV |
|---|---|
| 731-7726-XX | C |

TITLE
NP-TOWER,CABLE CROSS

| SCALE: 1:15 | SHEET 2 OF 4 | SHEET SIZE: B |
|---|---|---|

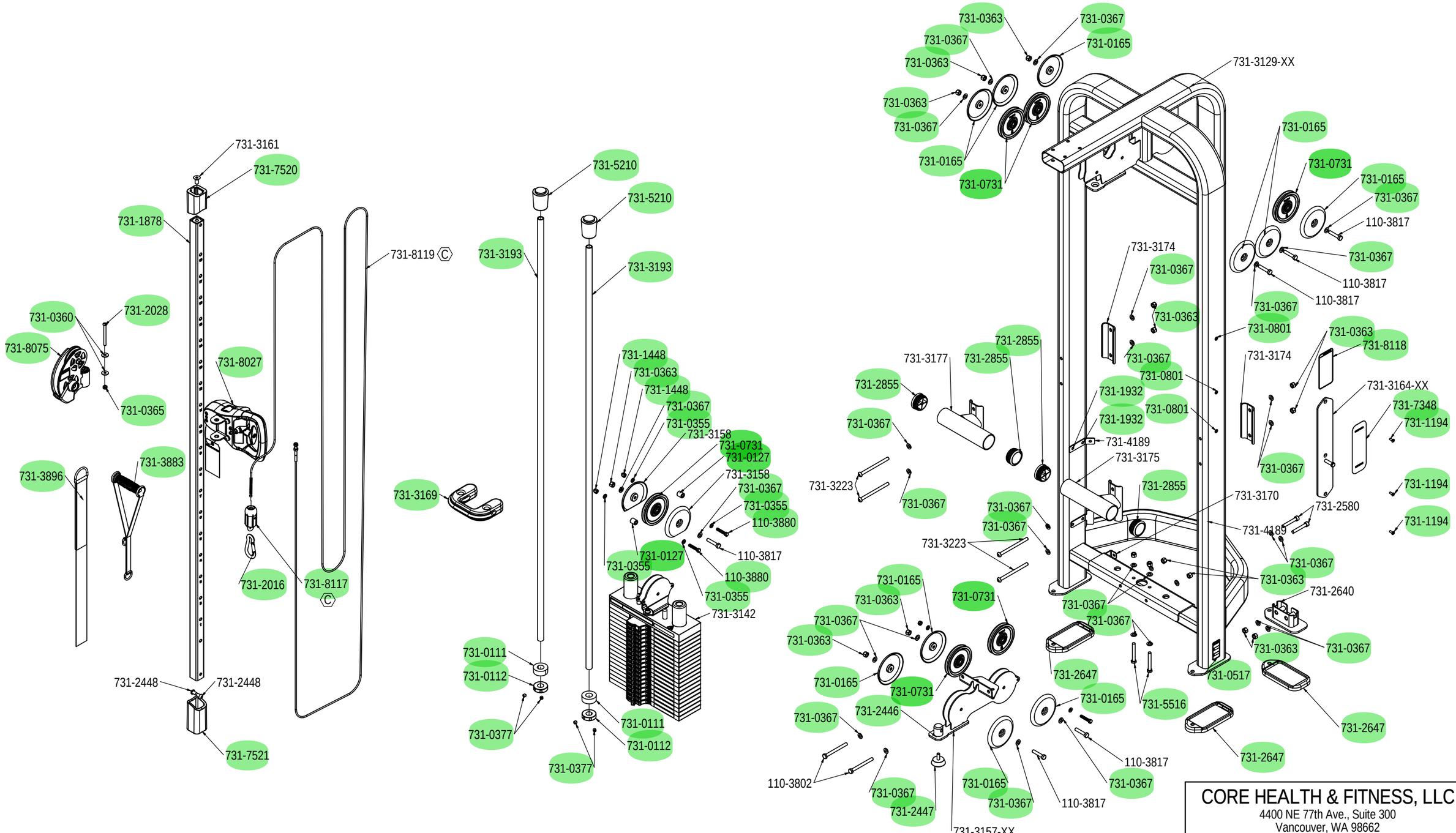


# CORE HEALTH & FITNESS, LLC

4400 NE 77th Ave., Suite 300
Vancouver, WA 98662

| CORE PART NO | REV |
|---|---|
| 731-7726-XX | C |

TITLE
NP-TOWER,CABLE CROSS

| SCALE: 1:13 | SHEET 3 OF 4 | SHEET SIZE: B |
|---|---|---|

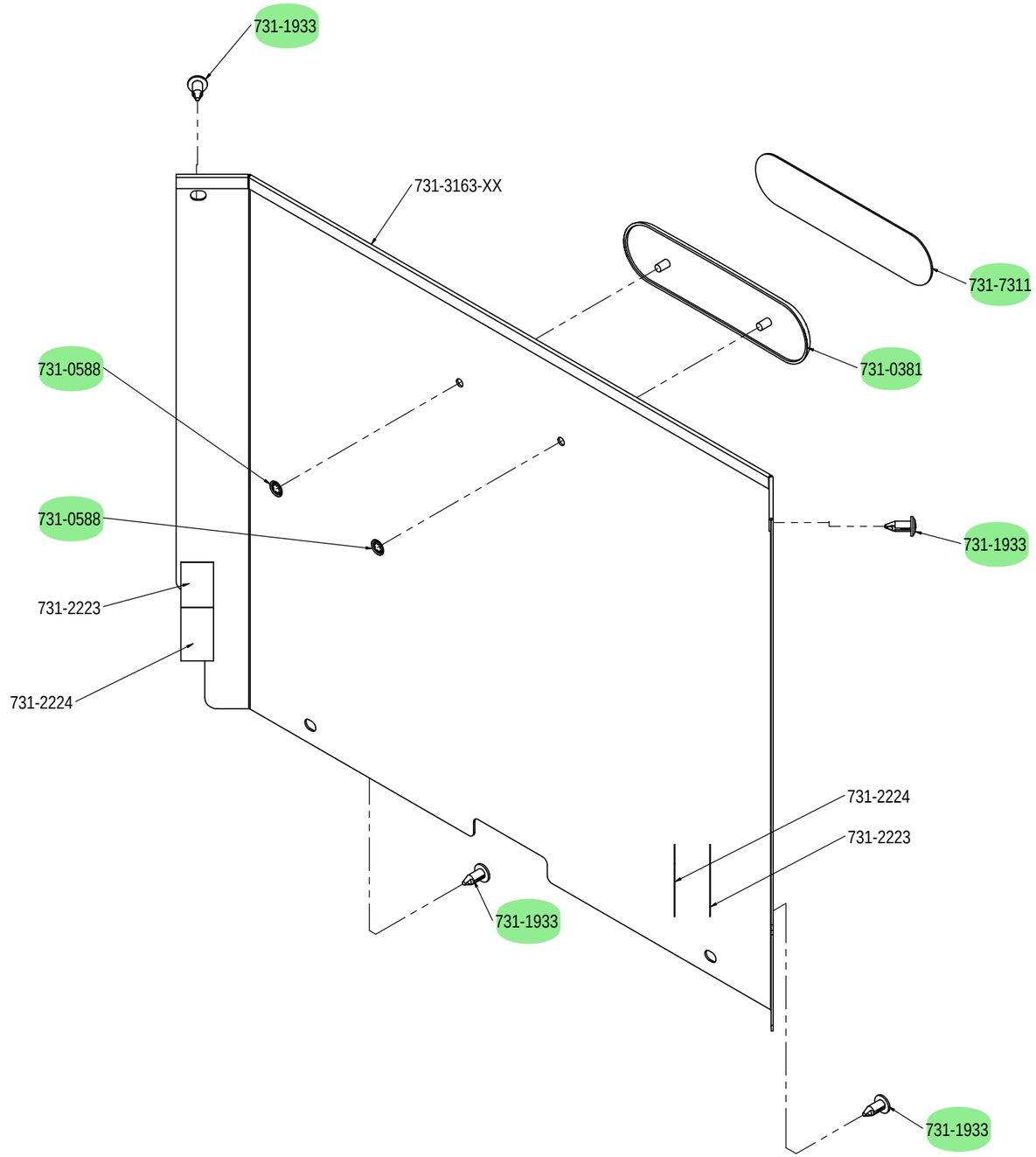


CORE HEALTH & FITNESS, LLC
4400 NE 77th Ave., Suite 300
Vancouver, WA 98662

| CORE PART NO | REV |
|---|---|
| 731-7726-XX | C |

TITLE
NP-TOWER,CABLE CROSS

| SCALE: 1:33.3 | SHEET 4 OF 4 | SHEET SIZE: B |
|---|---|---|

NOTES:

1. COLOR DICTATED BY SALES ORDER. SEE SOP 622-200-103 FOR PART COLOR DESIGNATOR.
2. UNIT CONSIST OF 17 BOXES/PALLETS
3. MAKE SURE LAST 5 DIGITS OF SKU MATCH (-XXXXX)
   a. FIRST (2) DIGITS (-*XX*) ARE THE MACHINE COLOR
   b. SECOND (2) DIGITS (-XX*XX*) ARE THE COLOR OF THE UPHOLSTERY
   c. FIFTH (5) DIGIT (-XXXX*X*) IS FOR CUSTOM CONFIGURATIONS.
4. ASSEMBLE AND INSPECT PER SOP 620-7918

| REVISION HISTORY | | | | |
|---|---|---|---|---|
| REV | DATE | DESCRIPTION | ECO | BY |
| A | 9/23/16 | DOCUMENT RELEASE | 15560 | RLH |

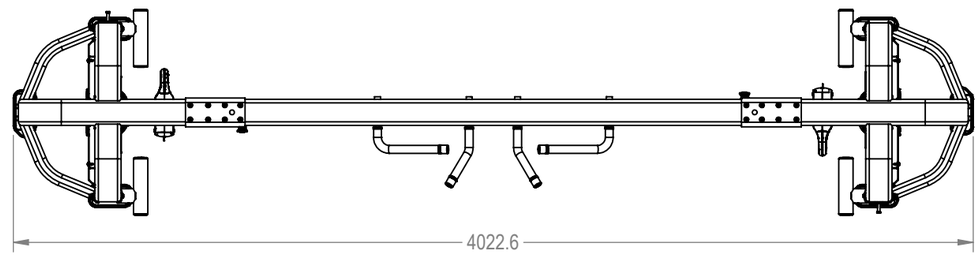


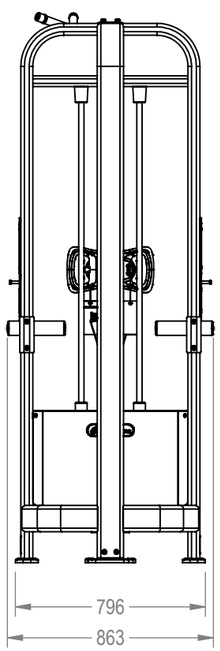


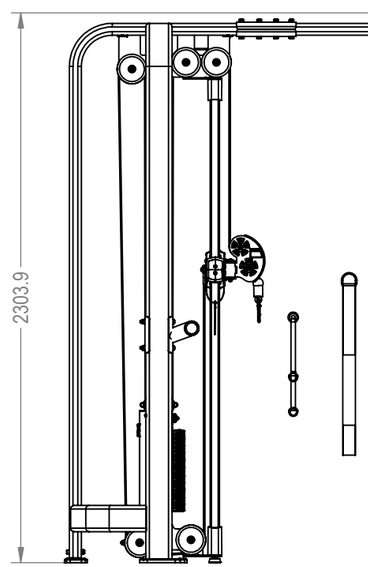


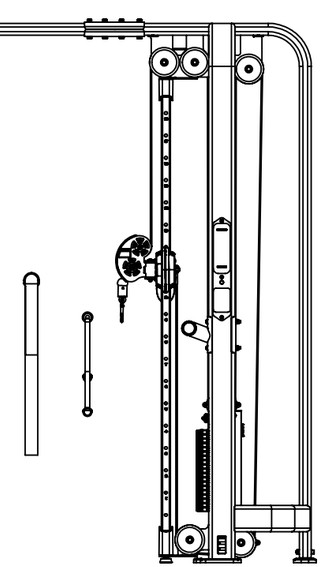

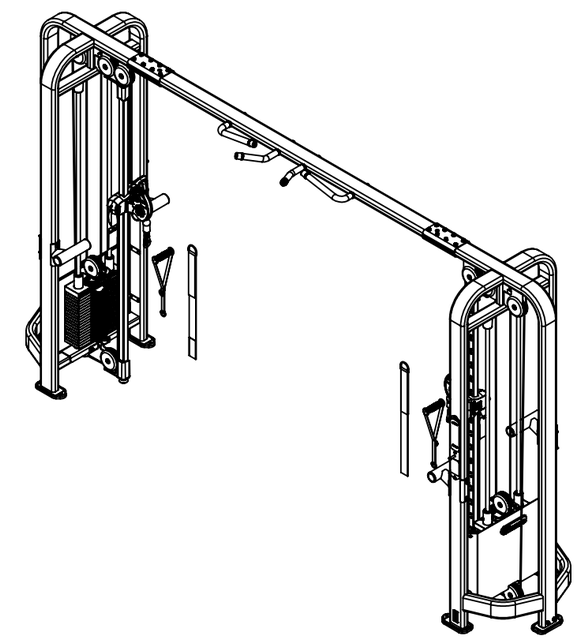

NOTICE OF PROPRIETARY INFORMATION

THIS DOCUMENT SHALL NOT BE REPRODUCED NOR SHALL THE INFORMATION CONTAINED HEREIN BE USED BY OR DISCLOSED TO OTHER EXCEPT AS EXPRESSLY AUTHORIZED BY CORE INDUSTRIES, INC., D.B.A. STAR TRAC.

DOCUMENT STATUS:
DEVELOPMENT

| CLASS OF WORK | | UNLESS OTHERWISE SPECIFIED DIMS ARE IN mm. TOLERANCES FOR MEASURE OF LENGTH ARE: 0.5 to 3 | > 3 to 6 | > 6 to 30 | > 30 to 120 | > 120 to 400 | > 400 to 1000 | > 1000 to 2000 | > 2000 | ANGLES = ±2° |
|---|---|---|---|---|---|---|---|---|---|---|
| FINE | | ±0.05 | ±0.05 | ±0.1 | ±0.15 | ±0.2 | ±0.3 | ±0.5 | ----- | |
| MEDIUM | X | ±0.1 | ±0.1 | ±0.2 | ±0.3 | ±0.5 | ±0.8 | ±1.2 | ±2 | |
| COARSE | | ±0.2 | ±0.3 | ±0.5 | ±0.8 | ±1.2 | ±2 | ±3 | ±4 | |
| VERY COARSE | | ----- | ±0.5 | ±1 | ±1.5 | ±2.5 | ±4 | ±6 | ±8 | |

MATERIAL
SEE BOM

FINISH
SEE NOTES

VENDOR: N/A P/N: N/A

THIRD ANGLE PROJECTION

| | INITIAL | DATE |
|---|---|---|
| DRAWN | RLH | 9/20/16 |
| CHECKED | | |
| APPROVED | | |
| | U.O.M. | MM |

CORE INDUSTRIES, INC. DBA STAR TRAC
14410 Myford Road
Irvine CA 92606

STARTRAC PART NO: 9NP-M9201-XXXXX
REV: A

TITLE: NP,MULTI,ROSSOVER CABLE

SCALE: 1:25 | SHEET 1 OF 2 | SHEET SIZE: B

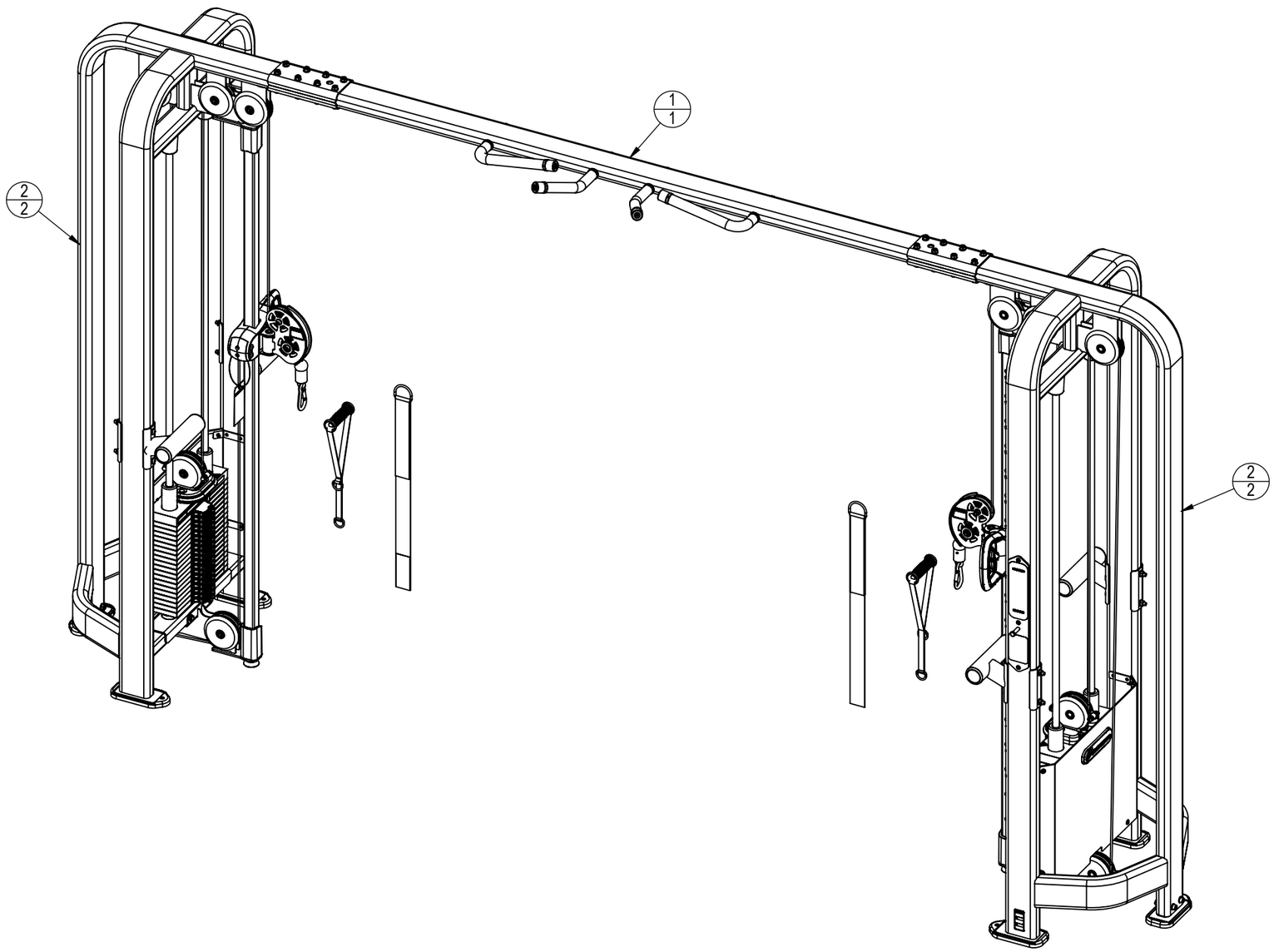


| ITEM NO. | PART NUMBER | DESCRIPTION | QTY. |
|---|---|---|---|
| 1 | 731-7725-XX | CONN,BOOM W/PULL UP BARS | 1 |
| 2 | 731-7726-XX | NP-TOWER,CABLE CROSS | 2 |

CORE INDUSTRIES, INC. DBA
STAR TRAC
14410 Myford Road
Irvine CA 92606

STARTRAC PART NO: **9NP-M9201-XXXXX**
REV: **A**

TITLE: NP,MULTI,ROSSOVER CABLE

SCALE: 1:16 | SHEET 2 OF 2 | SHEET SIZE: B

NOTES:

1. COLOR DICTATED BY SALES ORDER. SEE SOP 622-200-103 FOR PART COLOR DESIGNATOR.
2. ASSEMBLE AND INSPECT PER SOP 620-7918
3. IMAGE IN NON-PACKAGED VIEW.
4. PN: 731-6004, (BOX), NOT SHOWN IN BOM, FOR PACKAGING REF. ONLY.
5. MOUNT SECURELY TO PALLET
6. PACKAGE ITEMS IN A MANNER THAT THEY WILL NOT BE DAMAGED DURING SHIPPING/STORAGE.
7. LABEL PACKAGE TO INCLUDE
   a. PO NUMBER AND DATE
   b. ASSEMBLY NUMBER
   c. BAR CODE OF ASSEMBLY NUMBER (CODE 128)
   d. ASSEMBLY DESCRIPTION
   e. ASSEMBLY REVISION
   f. WEIGHT (LBS / KGs)

REVISION HISTORY

| REV | DATE | DESCRIPTION | ECO | BY |
|---|---|---|---|---|
| A | 9/16/16 | DOCUMENT RELEASE | 15560 | KY |

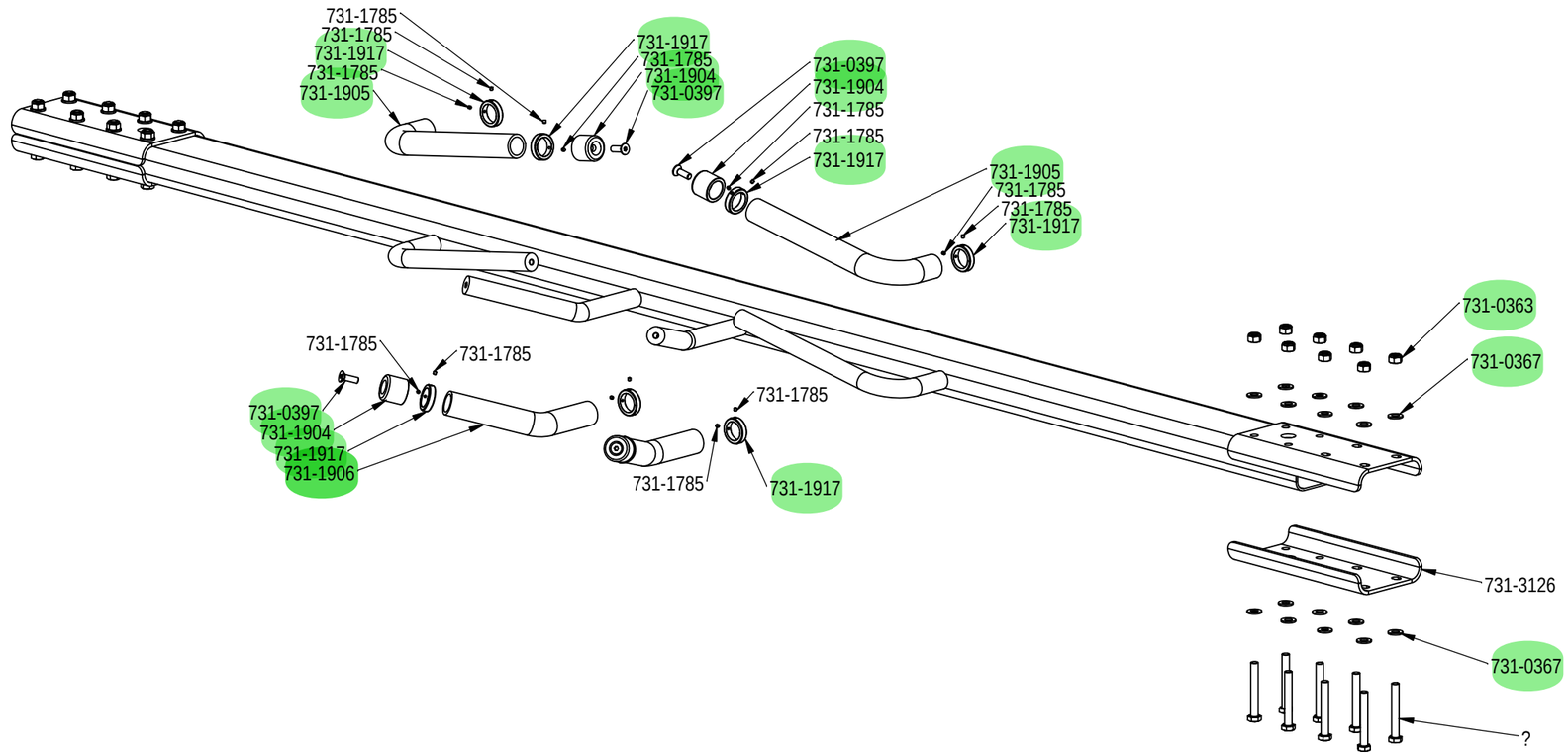


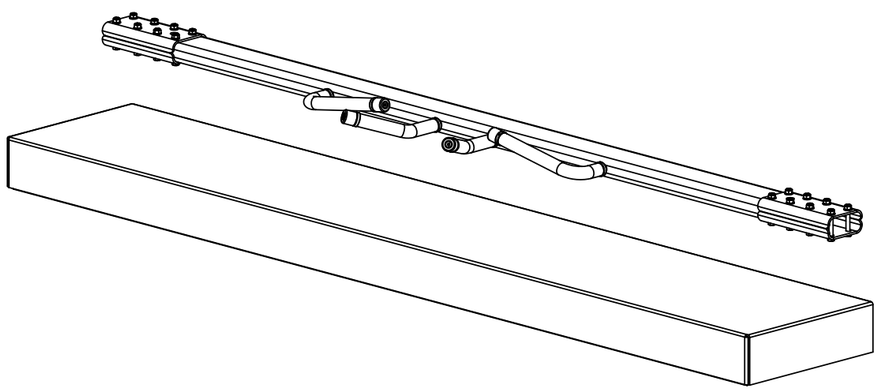

| ITEM NO. | PART NUMBER | DESCRIPTION | Default/QTY. |
|---|---|---|---|
| 1 | 731-0363 | NUT,M10X1.5,NYLOC | 16 |
| 2 | 731-0367 | WASHER,PLAIN,M10 | 32 |
| 3 | 731-0397 | SCREW,M8 X 1.25,25mm,FHM,HK | 4 |
| 4 | 731-1785 | SCREW,SET,M4X.7,4MM | 16 |
| 5 | 731-1904 | END CAP | 4 |
| 6 | 731-1905 | GRIP,PULL UP,OUTER | 2 |
| 7 | 731-1906 | GRIP,PULL UP INNER | 2 |
| 8 | 731-1917 | TRIM RING,GRIP | 8 |
| 9 | 731-3126 | BRACKET, CONNECTOR | 2 |
| 10 | 731-3128-XX | WELDMENT,CHIN UP BAR | 1 |
| 11 | 731-5516 | SCREW,M10x1.5,75mm,HHC,HE,AS,12.9,ZC | 16 |

# DOCUMENT STATUS:


NOTICE OF PROPRIETARY INFORMATION

THIS DOCUMENT SHALL NOT BE REPRODUCED NOR SHALL THE INFORMATION CONTAINED HEREIN BE USED BY OR DISCLOSED TO OTHER EXCEPT AS EXPRESSLY AUTHORIZED BY CORE HEALTH & FITNESS, LLC.


UNLESS OTHERWISE SPECIFIED DIMS ARE IN mm. TOLERANCES FOR MEASURE OF LENGTH ARE: ANGLES = ±2°

| CLASS OF WORK | | 0.5 to 3 | > 3 to 6 | > 6 to 30 | > 30 to 120 | > 120 to 400 | > 400 to 1000 | > 1000 to 2000 | > 2000 |
|---|---|---|---|---|---|---|---|---|---|
| FINE | | ±0.05 | ±0.05 | ±0.1 | ±0.15 | ±0.2 | ±0.3 | ±0.5 | ----- |
| MEDIUM | X | ±0.1 | ±0.1 | ±0.2 | ±0.3 | ±0.5 | ±0.8 | ±1.2 | ±2 |
| COARSE | | ±0.2 | ±0.3 | ±0.5 | ±0.8 | ±1.2 | ±2 | ±3 | ±4 |
| VERY COARSE | | ----- | ±0.5 | ±1 | ±1.5 | ±2.5 | ±4 | ±6 | ±8 |

MATERIAL
SEE NOTES

FINISH
SEE NOTES

VENDOR: LAND AMERICA P/N:

THIRD ANGLE PROJECTION

| | INITIAL | DATE |
|---|---|---|
| DRAWN | KY | 9/16/16 |
| CHECKED | | |
| APPROVED | | |
| | U.O.M. | MM |

CORE HEALTH & FITNESS, LLC
4400 NE 77th Ave., Suite 300
Vancouver, WA 98662

CORE PART NO: 731-7725-XX
REV: A
TITLE: CONN,BOOM W/PULL UP BARS
SCALE: 1:8 | SHEET 1 OF 1 | SHEET SIZE: B